INSTRUCTION SHEET

MANUAL ROTATION

APPLICATION: Serial # SMT107538 & less; SMT107690 to SMT107701; SMT107807 to SMT107878

INSTALLATION

NOTE: The rotation handle can be installed on the right or left side of the three point hitch.

FOR SNOWBLOWER MODELS B48, B54 & B64, SBG1084, SBG1094

1. **Figure 1:** Install the rotation bushing (item 2) over the chute base.
2. **Figure 2:** Insert the 1 11/16" plastic bushing (item 1) in the worm support bracket (item 2) and insert the longest end of the rotation worm (item 3).
3. **Figure 2:** Insert the 1 5/16" plastic bushing (item 4) in the welded tube of the snowblower (item 5) and insert the other end of the rotation worm (item 8)..
4. **Figure 2:** Place the support (item 2) under the snowblower's right upper plate (item 6).
5. **Figure 1:** Place the chute (item 1) over the rotation bushing (item 2) and install the four retaining plates (item 3) with eight 1/4" x 3/4" bolts and eight serrated flange nuts (items 4-5). Tighten securely.
6. **Figure 2:** Insert the rotation tube (item 7) in the worm assembly aligning the holes, insert an Allen socket head capscrew 10-24 x 1" (item 8) making sure the screw head sinks into the rotation worm and secure with a nylon insert nut (item 9)

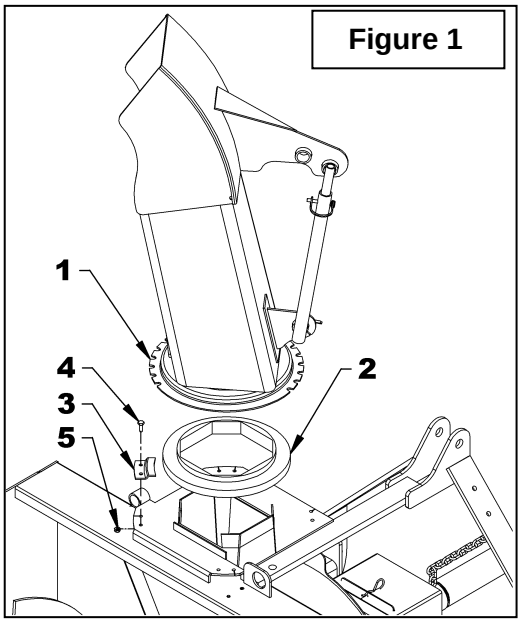

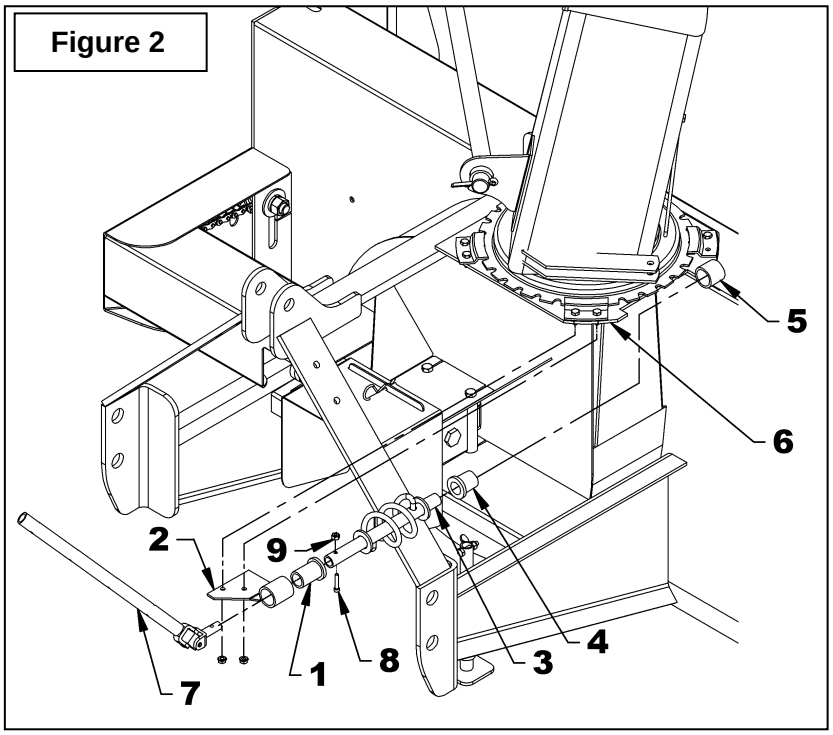

INSTRUCTION SHEET

MANUAL ROTATION

FOR SNOWBLOWER MODELS B74, B84 & B94, SBG1084, SBG1094

1. **Figure 3:** Apply grease on the chute base (item 1) and around the snowblower chute ring.
2. **Figure 4:** Insert the 1 11/16" plastic bushing (item 1) in the worm support bracket (item 2) and insert the longest end of the rotation worm (item 3).
3. **Figure 4:** Insert the 1 5/16" plastic bushing (item 4) in the welded tube of the snowblower (item 5) and insert the other end of the rotation worm (item 8).
4. **Figure 4:** Place the support (item 2) and the support spacer (item 10) under the snowblower's right upper plate (item 6).
5. **Figure 3:** Install the chute (item 1) with the four retaining plates (item 3), four spacers (item 2), eight 1/4" x 3/4" bolts and eight serrated flange nuts (items 4-5). Tighten securely.
6. **Figure 4:** Insert the rotation tube (item 7) in the worm assembly aligning the holes, insert an Allen socket head capscrew 10-24 x 1" (item 8) making sure the screw sinks into the rotation worm and secure with a nylon insert nut (item 9).

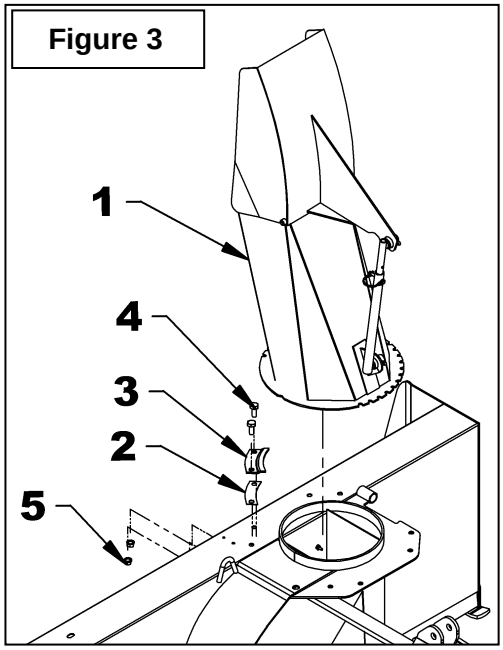

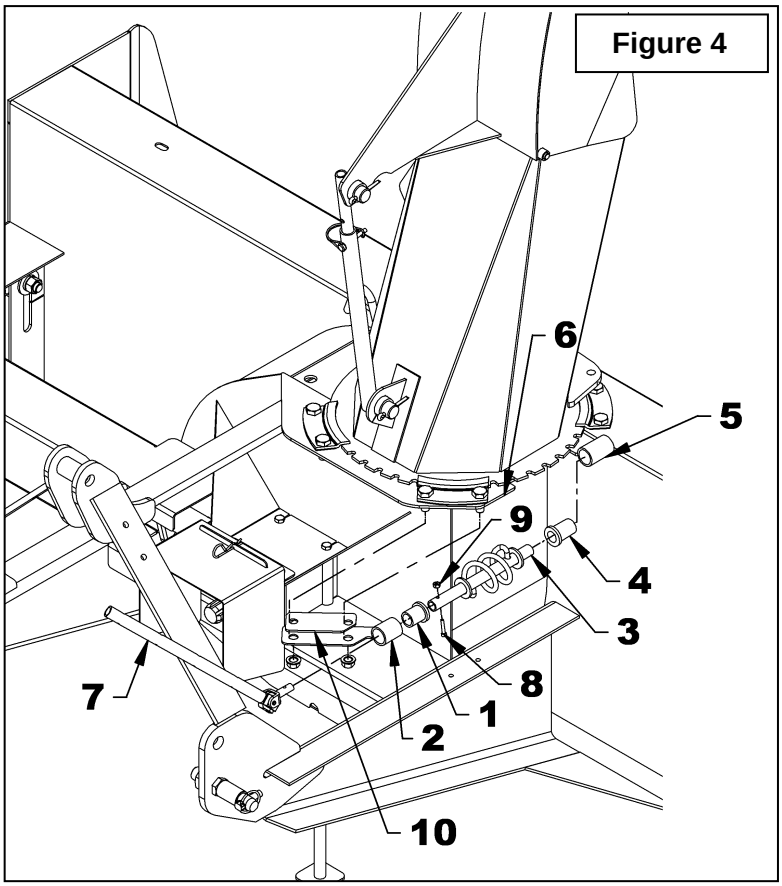

FOR ALL SNOWBLOWER MODELS

7. **Figure 5:** Install the rotation bracket (item 1) on the left or right arm of the three point hitch with two 3/8" NC x 1 1/4" bolts, lockwashers and nuts (items 2-3-4). Tighten firmly.
8. **Figure 5:** Attach the handle support bracket (item 5) to the rotation bracket (item 1) with a 3/4"NC x 1 1/4" bolt, lockwasher and nut (items 6-7-8) making sure to attach the brackets in the direction illustrated.
9. **Figure 5:** Insert the handle support (item 9) in the bracket (item 5) adjusting the height of the support according to your needs and secure in place with a 3/8" x 1/2" square head setscrew (item 10).
10. **Figure 5:** Insert the grommet (item 11) in the handle support (item 9).
11. **Figure 6:** Insert the handle (item 1) in the handle support (item 4) and in the rotation tube. Select desired length, align nearest holes and secure with the 4 mm x 80mm hairpin (item 2). Install the plastic handle (item 3).
12. **Figure 5:** Once the snowblower is attached to the tractor, adjust handle position and height to ensure comfort and safe operation. Tighten setscrew (item 10) on the handle support as well as the 3/4" x 1 1/2" bolt, 3/4" lockwasher and 3/4" nut (items 6-7-8).
13. **Figure 6:** To insure the manual rotation functions properly, position the handle support (item 4) the closest possible to the top link mounting point of the three point hitch while making sure it does not come into contact with the operator's seat when the snowblower is fully raised.
14. Tighten all bolts according to the ***Torque Specification Table*** at the end of the snowblower manual.

ATTENTION To avoid personal injury, check the full lifting range of the snowblower, to ensure that the chute rotation handle is clear of the operator's area when the snowblower is in raised position.

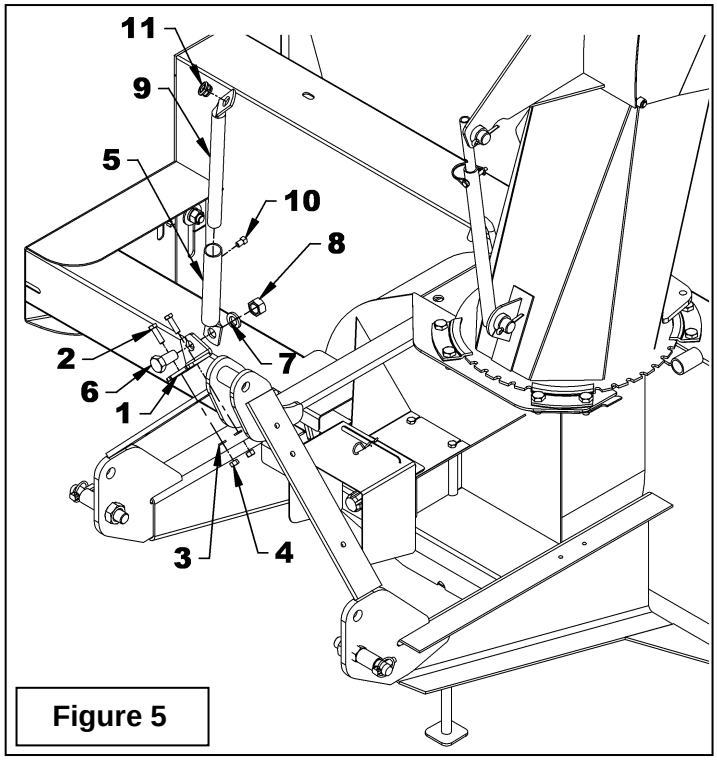

Figure 5

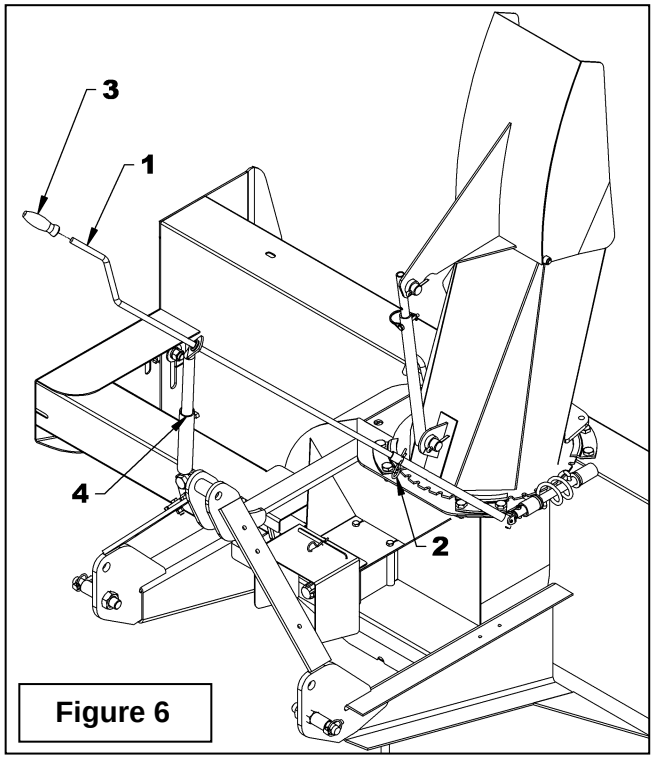

Figure 6

PARTS
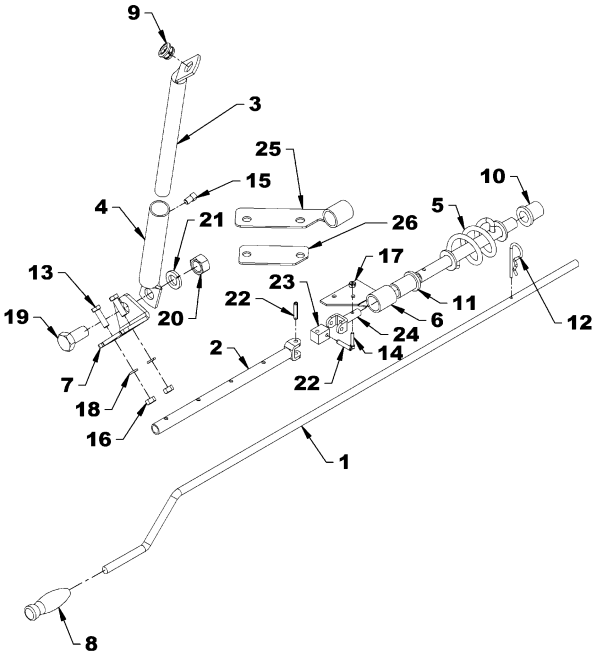
REF.	DESCRIPTION	QTY	PART #
1	Handle	1	664902
2	Rotation tube	1	660188
3	Handle support	1	660187
4	Handle support bracket	1	660269
5	Rotation worm	1	659161
6	Worm support bracket	1	659145
7	Bracket	1	660388
8	Plastic handle	1	656797
9	Plastic grommet	1	657390
10	Plastic bushing 1 5/16"	1	657335
11	Plastic bushing 1 11/16"	1	657336
12	Hairpin 4mm x 80mm	1	1800002
13	Bolt hex. 3/8"NC x 1 1/4" Plated	2	0100039
14	Allen socket head capscrew 10-24 x 1" Plated	1	0800009
15	Square head setscrew 3/8" x 1/2" Plated	1	0600006
16	Nut hex. 3/8" NC Plated	2	0900003
17	Nylon insert locknut 10-24 Plated	1	1000002
18	Lockwasher 3/8" Plated	2	1200004
19	Bolt hex. 3/4"NC x 1 1/2" Plated	1	0100115
20	Nut hex. 3/4" NC Plated	1	0900008
21	Lockwasher 3/4" Plated	1	1200008
22	Roll pin 1/4" x 1 1/4" lg Plated	2	1600015
23	Universal block	1	658193
24	Rotation yoke	1	659595
25	Worm support bracket (for SBG1084 & SBG1094 only)	1	668477
26	Spacer	1	668092